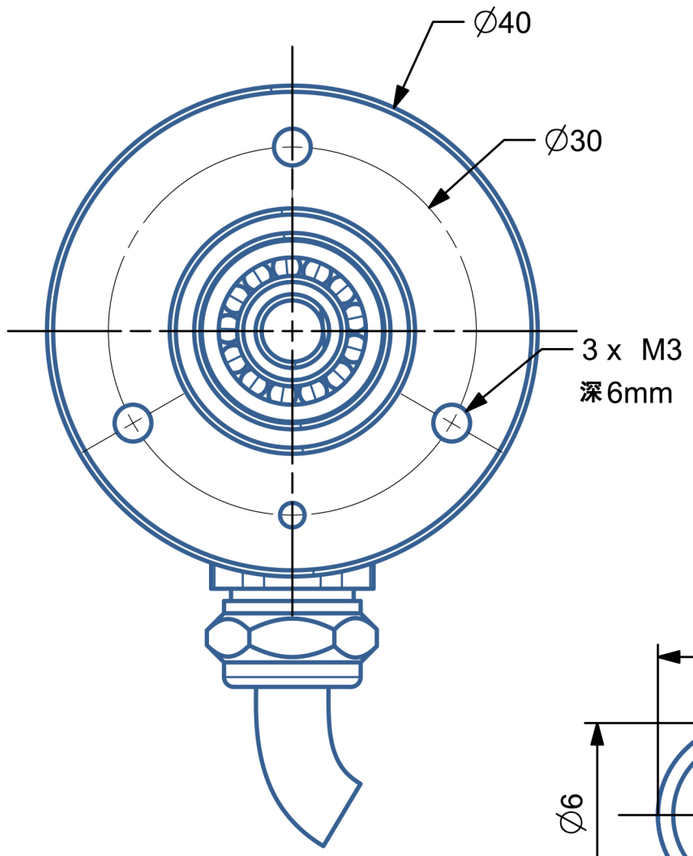

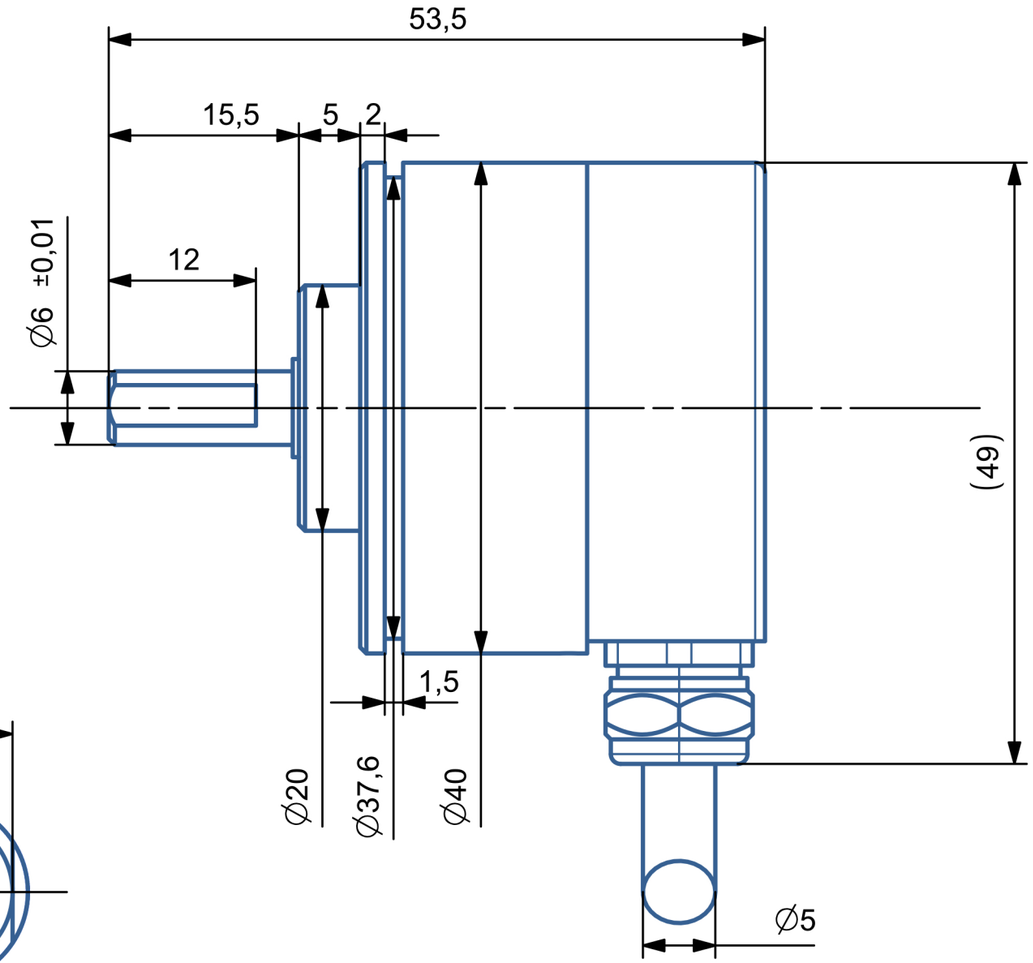

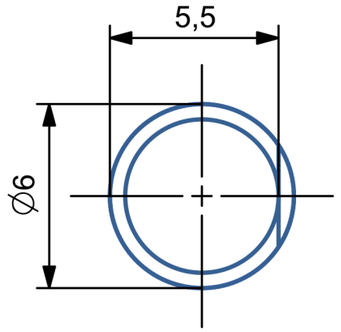

D 字型轴尺寸
比例 5 : 1

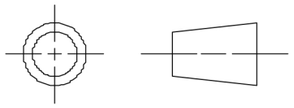

ALL DIMENSIONS IN MM

BRITER 布瑞特科技		THIS DRAWING HAS BEEN PRODUCED USING AN EXAMPLE TEMPLATE PROVIDED BY SIEMENS PLM SOFTWARE
FIRST ISSUED		TITLE 编码器 IP68 BRT38-6mm轴
DRAWN BY		
CHECKED BY		
APPROVED BY		SIZE A3 / DRG NO. / SHEET REV A
		SCALE 1:1 / SHEET 1 OF 1 / A3